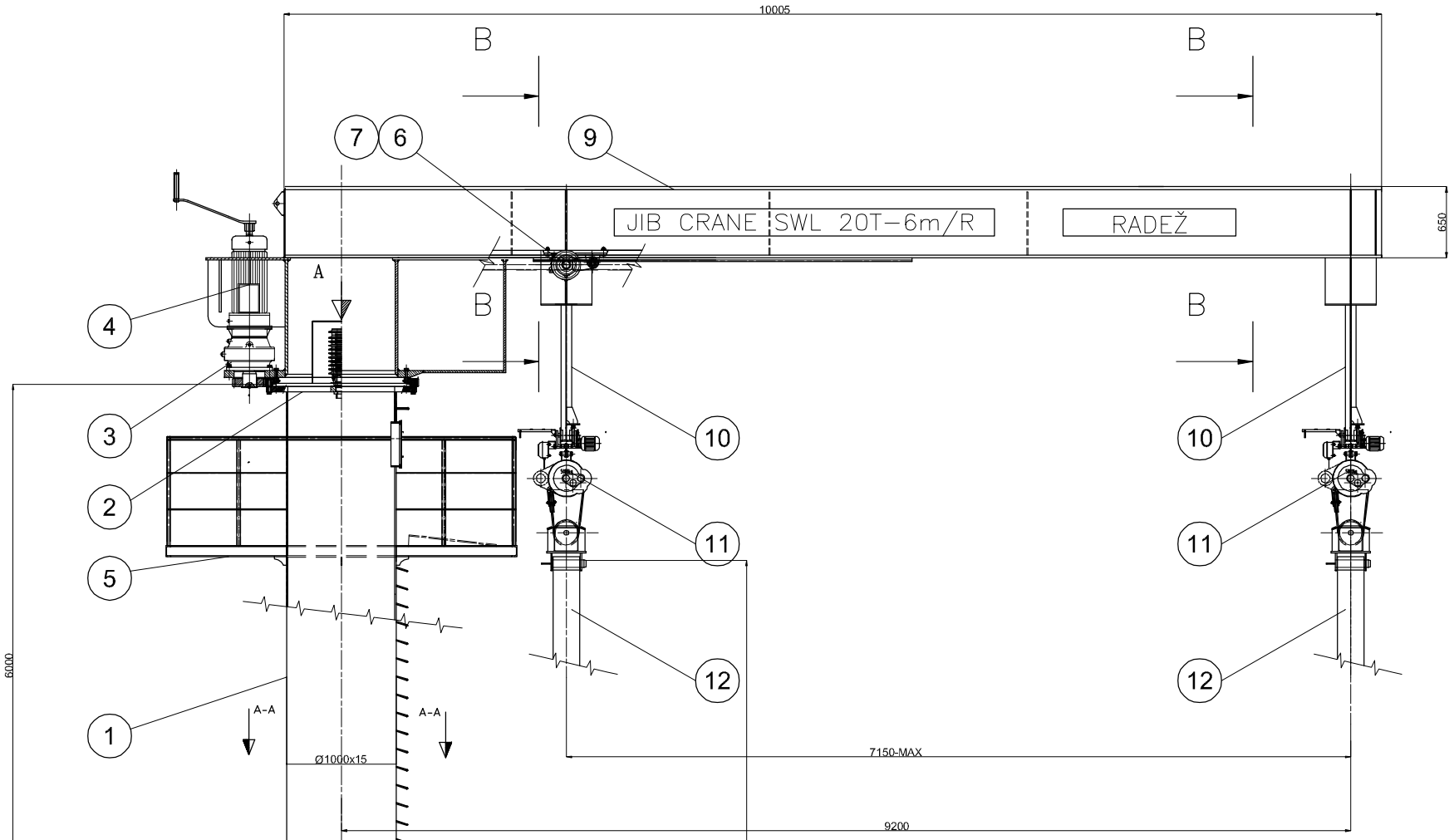

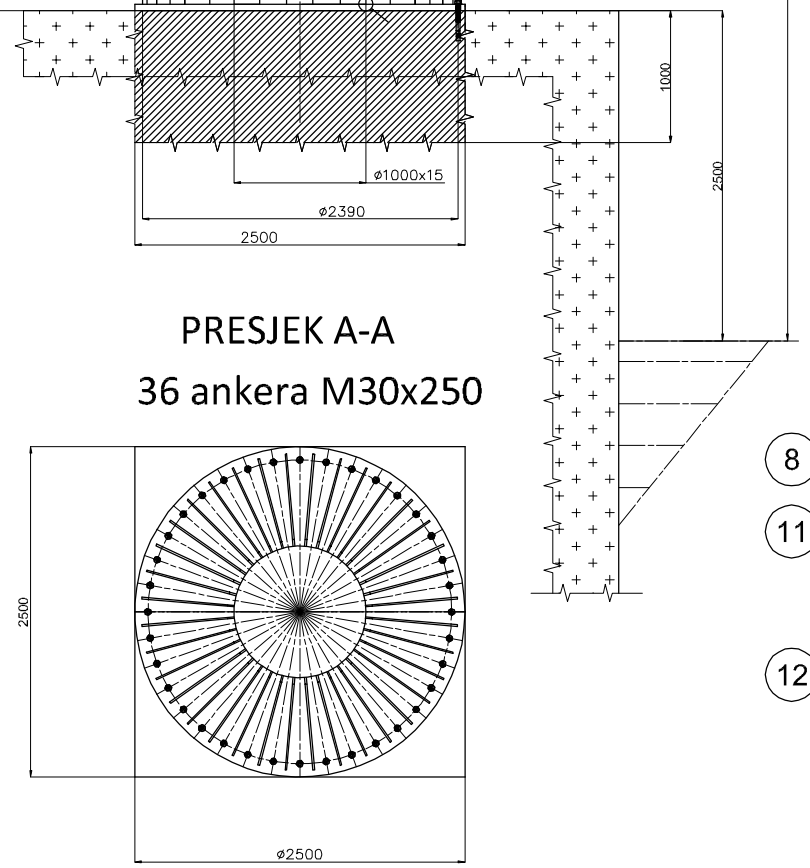

PRESJEK A-A

36 ankera M30x250

PRESJEK B-B

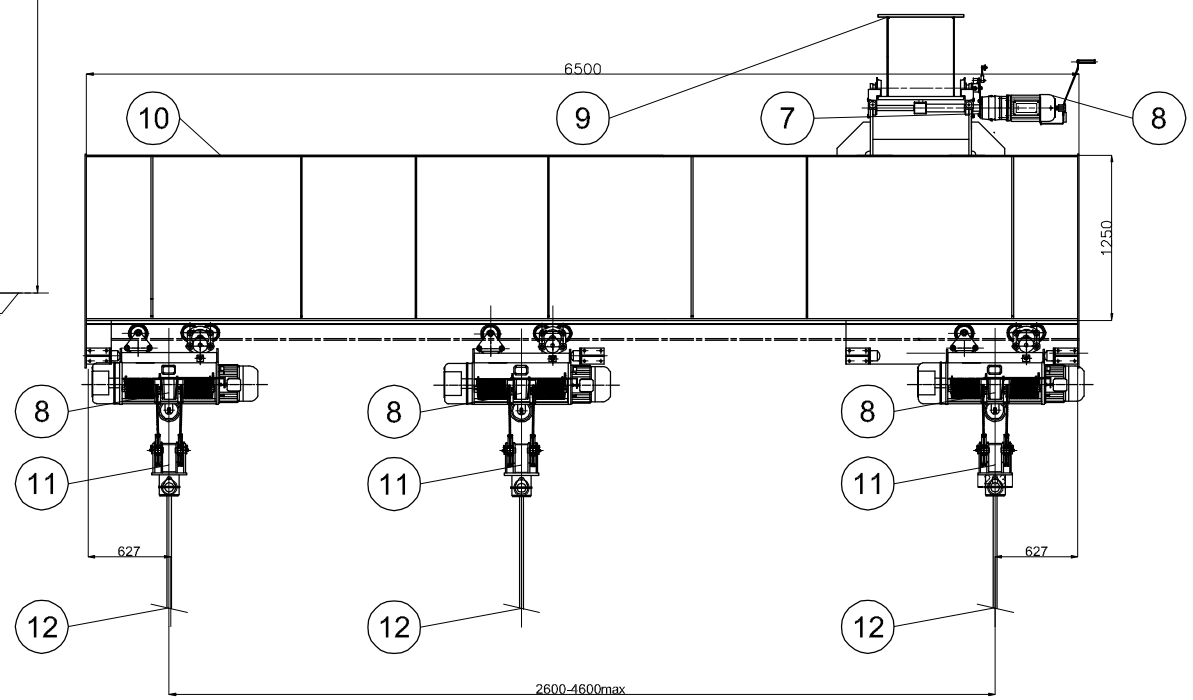

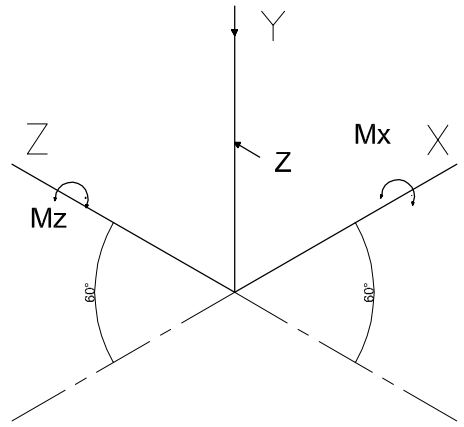

POGLED A

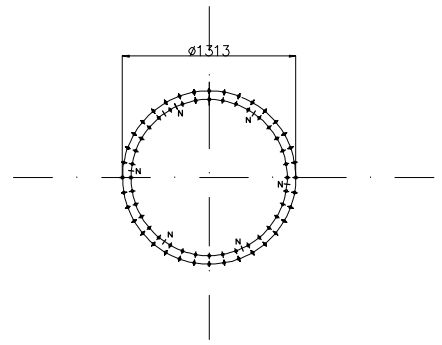

LEŽAJ LALEONESSA
VE098B00

Mx=500290 Nm
Mz=2553160 Nm
Mekv=1702050 Nm

Y=500290 Nm
Z=X=4970 N-sila vjetra

ITEM №	QTY	UN	DRAWING № STANDARD	DENOMINATION	SIZE / DIMENSION	MATERIAL	MASS
12	2			Trakasta priveznica s omčama 10.000 kg PODIZNA TRAKA			34
11	4		093.01.150	CARGO BLOCK KOLOTURNIK TERETA			200
10	2		KONČAR	BEAM POPREČNI NOSAČ			2670
9	1		093.11.110	JIB GRANA			3650
8	4		DQYTCD220815	HOISTING WINCH CD 5t-6m PODIZNO VITLO 5T-6m			655
7	1		BREVINI	REDUCTION GEAR RAF30/3/120 REDUKTOR POKRETANJA			75
6	1		KONČAR	EL. MOTOR 5ABZA 130M-4/IM V3/6,5kW ELEKTROMOTOR POKRETANJA POP. NOSAČA			33
5	1		093.11.170	PLATFFORM PLATFORMA SA OGRADOM			400
4	1		KONČAR	EL. MOTOR 5ABZA 130M-4/IM V3/6,5kW ELEKTROMOTOR OKRETANJA			33
3	1		BREVINI	REDUCTION GEAR ET3045/MR1/364,8/00 REDUKTOR			75
2	1		LALEONESSA	SLEWING RING VE098B00 LEŽAJ			310
1	1		093.11.110 1(1)	CRANE FOUNDATION TEMELJNI STUP			3785

RADEŽ d.d.

BLATO - CROATIA

tel +385 20 851 244 fax +385 20 851 202

JIB Crane 20T-6m/R

Dizalica sa okretnom granom 20T/10m

OPĆI PLAN

MASS	13650
SCALE	1:20 (1:1)
CHECKED BY	Vinko Zaverić dipl.ing.
DESIGNED BY	Tonči Gavranić dipl.ing.
DRAWN BY	Tonči Gavranić dipl.ing.
DATE	04.10.2022

Existing law protects Radež's right of possesion to this drawing. The design or the drawing must not, without permission of the company, be published, copied, reproduced, manufactured or exploited in any other unauthorised way.

CONNECT DRAWING № | DRAWING № 093.11.100 | SHEET 1(1) | ED

SUPPLIED: KOMADINA ACI Starigradska Draga

D-TEH-038A1